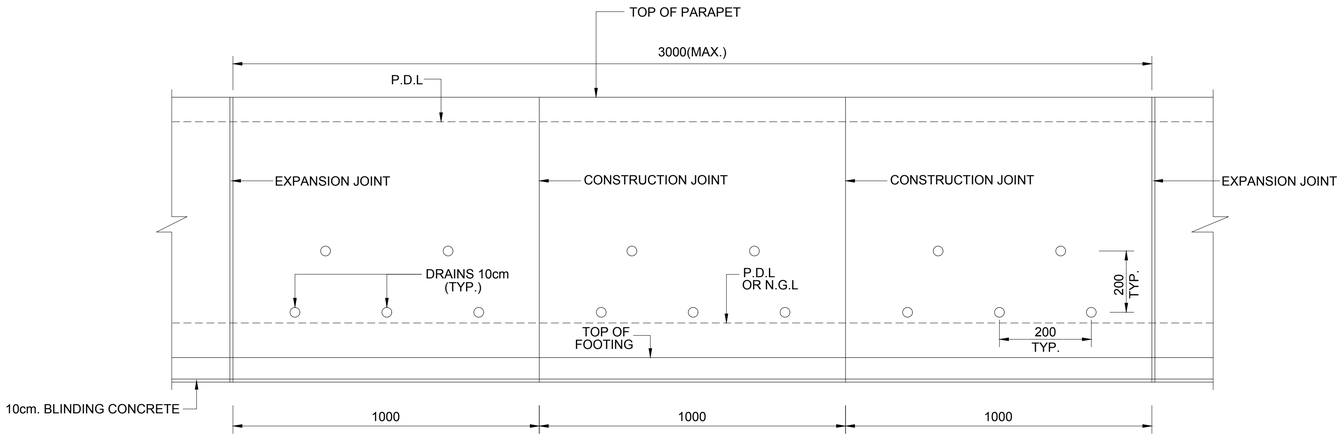

RETAINING WALL ELEVATION SHOWING VERTICAL JOINTS

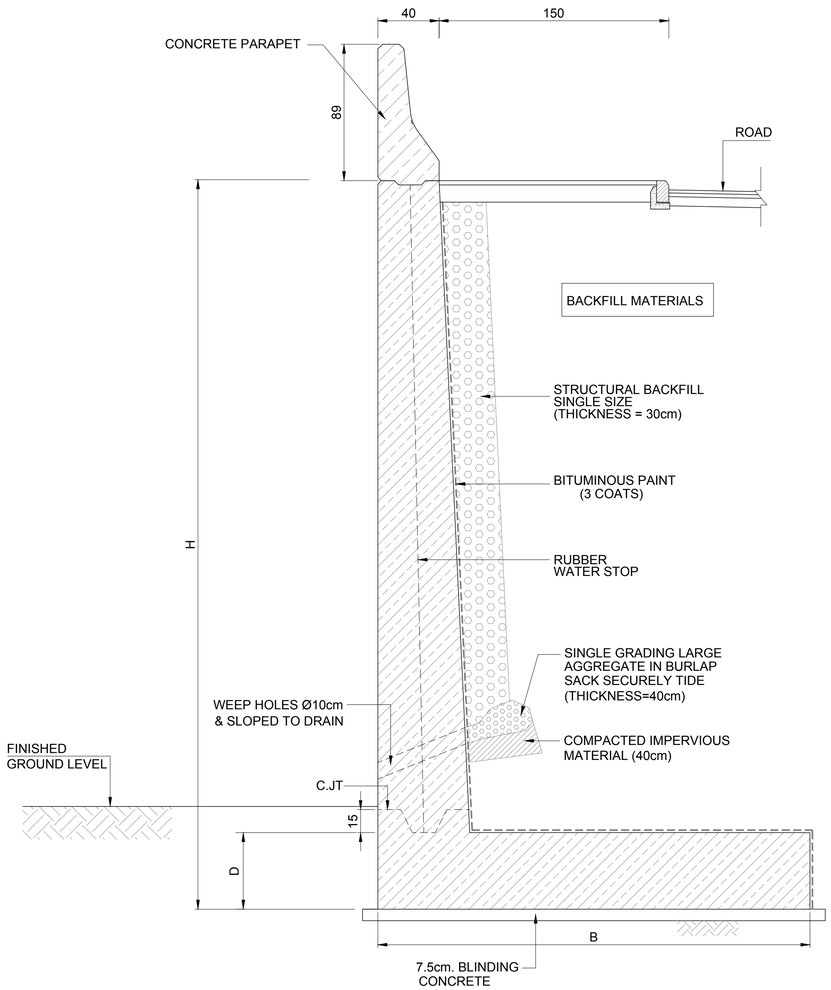

TYPICAL SECTION IN L-SHAPE R.W.

BACKFILL DRAINS FOR RETAINING WALL

N.T.S

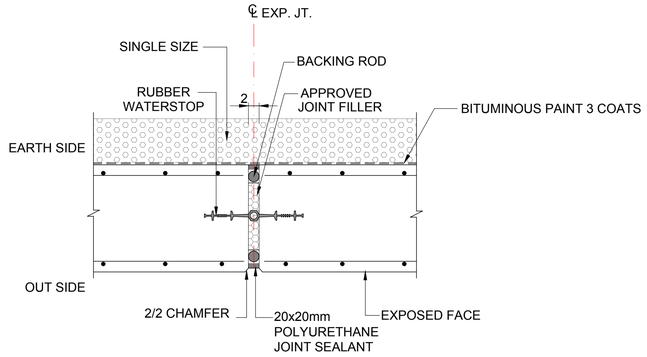

EXPANSION JOINT (EXP.JT.)

N.T.S

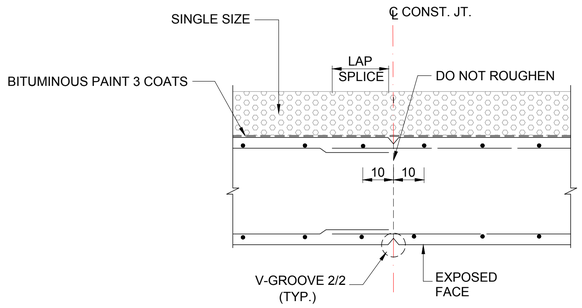

CONSTRUCTION JOINT (CONST.JT.)

N.T.S

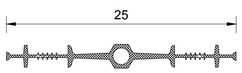

RUBBER WATER STOP

NOTES :

1. ALL DIMENSIONS ARE IN CENTIMETERS UNLESS OTHERWISE INDICATED.
2. WEEP HOLES SHALL BE PROVIDED AT THE SPACING SHOWN. SUITABLE UNDER-DRAINS LOCATED BACK OF STEM AND CONNECTED TO AN OUTLET PIPE MAY BE USED IN LIEU OF WEEP HOLES.

Rev.	Date	Description	Checked

Client

Greater Amman Municipality

Project Name

BUS RAPID TRANSIT (BRT) SYSTEM IN AMMAN - PACKAGE 10 A & C
NASER BIN JAMEEL STREET

Consultants

steer davies gleave

CONSOLIDATED CONSULTANTS GROUP

Drawing Title

L-SHAPE RETAINING WALL FOR FILL SECTIONS GENERAL DETAILS

Designed By	H. HATTER	Date	OCT 2018
Drawn By	A. HAMDEH	Stage	–
Checked By	H. SALHI	Sheet Size	A1
Approved By	H. SALHI	Scale	N.T.S
Drawing No. :	RW-001	Rev.	00

DIMENSIONS				REINFORCEMENT																		BEARING CAPACITY kN/m²
H	B	D	t	BAR A1					BAR A2			BAR A3			B1			F1		F2		
cm	cm	cm	cm	SIZE Ø mm	SP cm	a cm	b cm	LENG.	SIZE Ø mm	SP cm	LENG.	SIZE Ø mm	SP cm	LENG.	SIZE Ø mm	SP cm	LENG.	SIZE Ø mm	SP cm	SIZE Ø mm	SP cm	
150	130	40	40	10	20	120	140	260	-	-	-	10	20	200	10	20	210	10	20	10	20	80
200	150	40	40	10	20	140	190	330	-	-	-	12	20	250	10	20	230	10	20	10	20	100
250	180	40	40	12	20	170	120	290	12	20	200	12	20	300	12	20	260	10	20	10	20	105
300	210	40	40	14	20	200	120	320	14	20	250	14	20	350	14	20	300	10	20	10	20	130
350	240	40	40	14	20	230	120	350	14	20	300	16	20	400	16	20	340	10	20	10	20	160
400	270	45	45	16	20	260	130	390	16	20	345	20	20	460	20	20	380	14	20	14	20	190
450	300	50	50	16	15	290	130	420	16	15	390	20	15	520	20	15	420	14	20	14	20	220
500	340	50	50	16	15	330	130	460	16	15	440	20	15	580	20	15	470	14	20	14	20	235
550	370	55	55	16	15	360	140	500	16	15	490	25	15	640	25	15	500	16	20	16	20	255
600	400	60	60	16	15	390	160	550	16	15	530	25	15	700	25	15	540	16	20	16	20	270

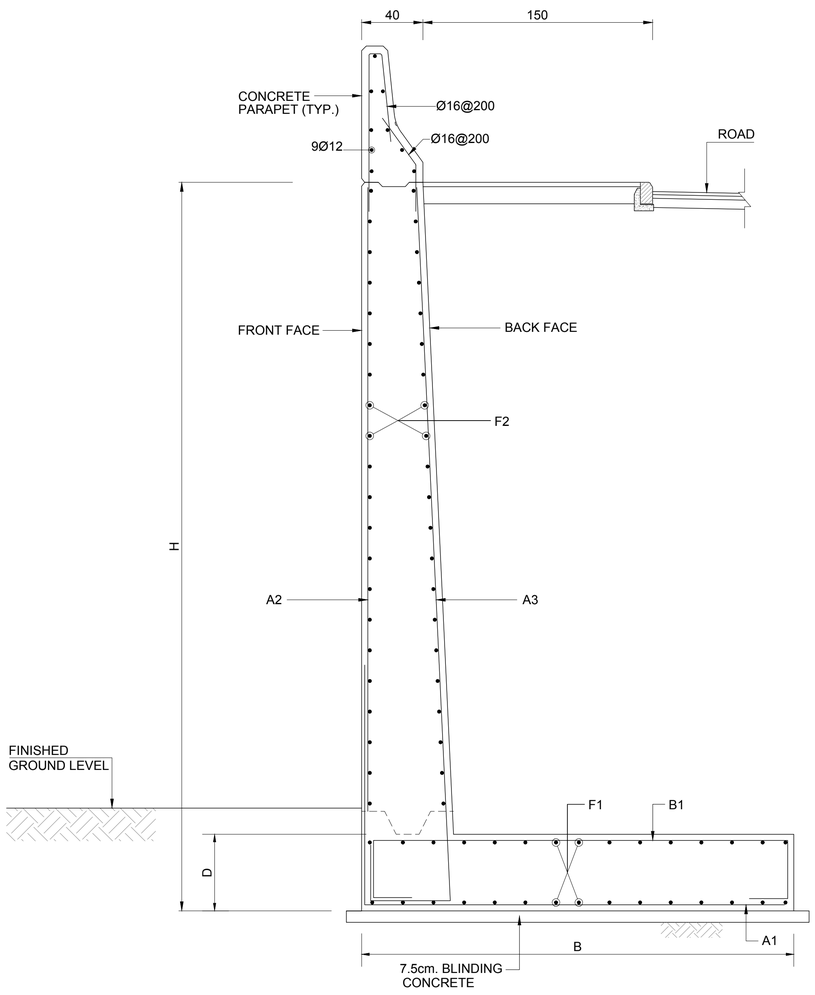

TYPICAL SECTION
N.T.S

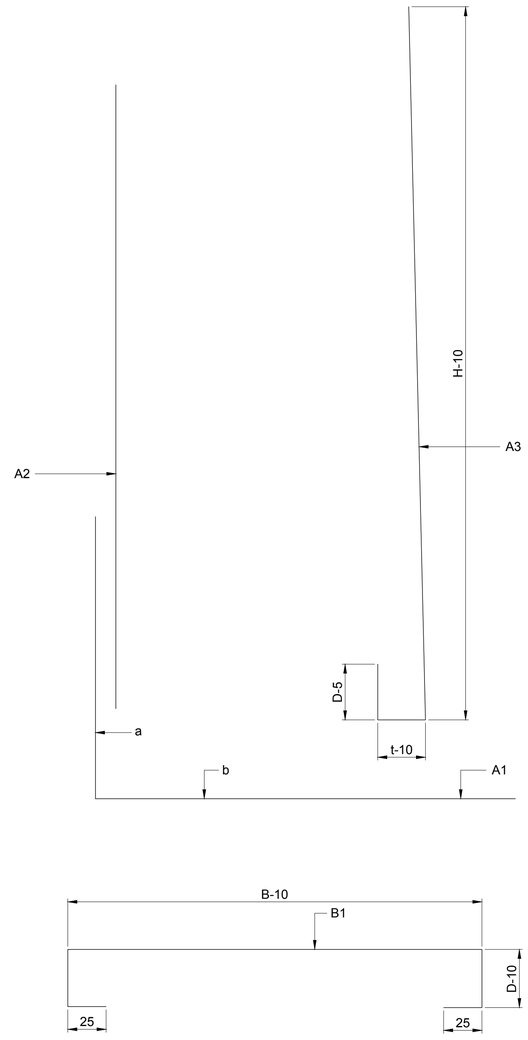

NOTES :

1) ALL DIMENSIONS ARE IN cm. EXCEPT REINF. DIA. WHICH ARE IN mm.

2) DESIGN DATA:
a- ANGLE OF INTERNAL FRICTION Ø=30
b- WIEGHT OF SOIL = 1.8 t/m³
c- HORIZONTAL ACCELERATION A_H=0.12-0.15g
d- LIVE LOAD HS 20 - 44 + 50% OVERLOAD

3) EXPOSED SURFACES SHALL BE FAIR FACED, AND BURIED SURFACES SHALL BE PROTECTED BY BITUMINES PAINT 3 COATS.

4) THE REINFORCING SCHEDULES SHOWN ARE ONLY FOR THE CORRESPONDING WALL DIMENSIONS LISTED. LENGTH OF REINFORCING BARS SHOULD BE ADJUSTED TO MATCH THE RETAINING WALL HEIGHT.

5) REINFORCED CONCRETE SHALL BE CLASS 30.
6) BLINDING CONCRETE SHALL BE CLASS 15 .
7) STEEL REINFORCEMENT SHALL CONFORM TO THE REQUIRE. OF ASTM A615 GRADE 60 .

Rev.	Date	Description	Checked
0			

Client
Greater Amman Municipality

Project Name
BUS RAPID TRANSIT (BRT) SYSTEM IN AMMAN - PACKAGE 10 A & C
NASER BIN JAMEEL STREET

Consultants
steer davies gleave
CONSOLIDATED CONSULTANTS GROUP

Drawing Title
L-SHAPE RETAINING WALL FOR FILL SECTIONS REINFORCEMENT DETAILS

Designed By	H. HATTER	Date	OCT 2018
Drawn By	A. HAMDEH	Stage	–
Checked By	H. SALHI	Sheet Size	A1
Approved By	H. SALHI	Scale	N.T.S
Drawing No. :	RW-002	Rev.	00

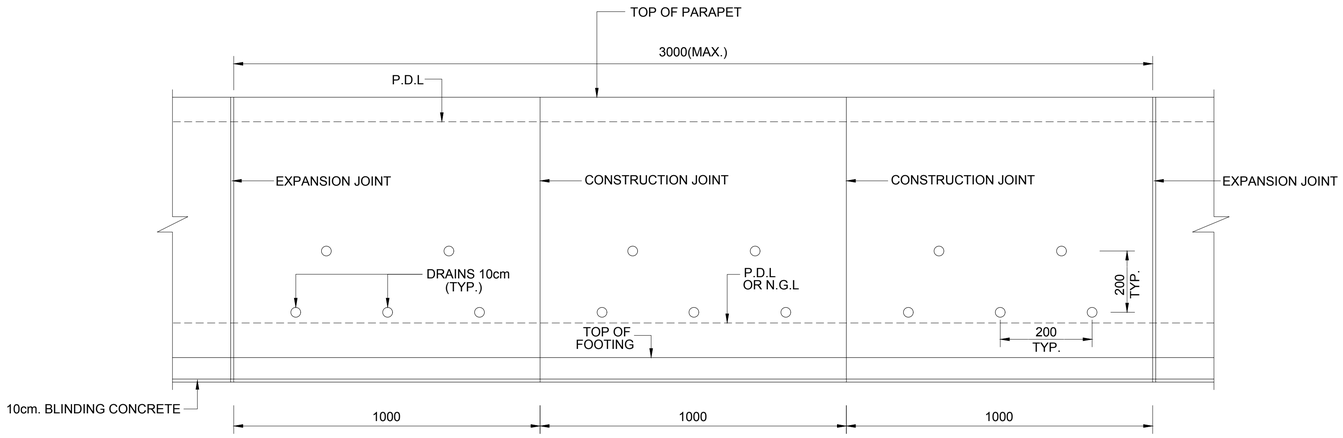

RETAINING WALL ELEVATION SHOWING VERTICAL JOINTS

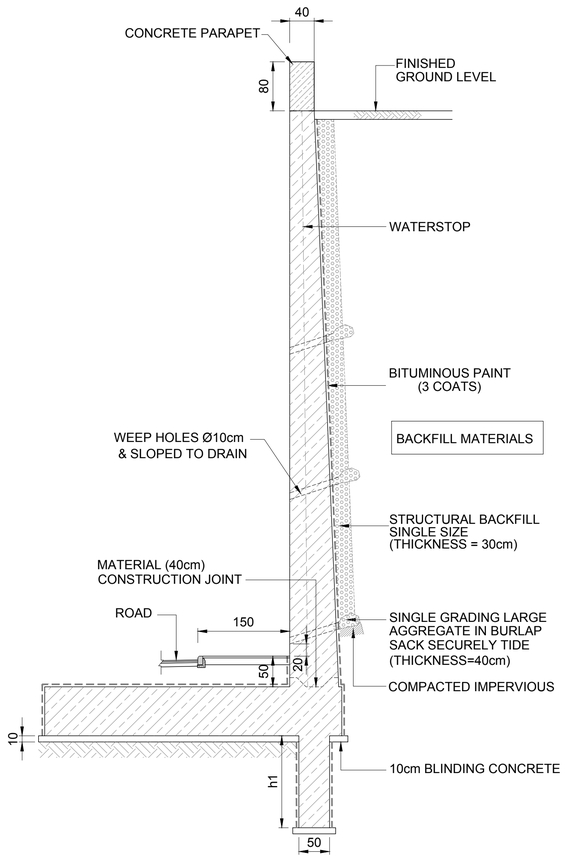

TYPICAL SECTION IN L-SHAPE RETAINING WALL

N.T.S

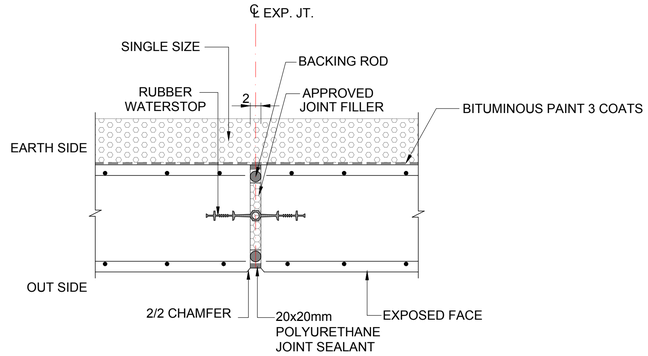

EXPANSION JOINT (EXP.JT.)

N.T.S

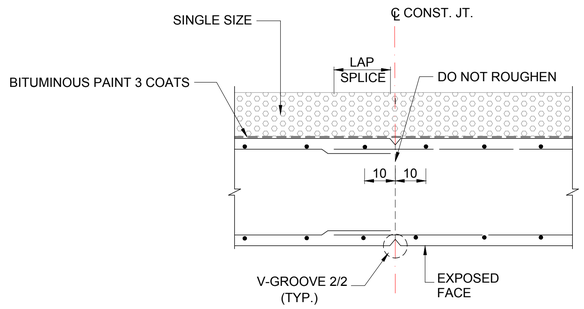

CONSTRUCTION JOINT (CONST.JT.)

N.T.S

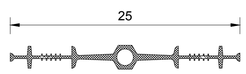

RUBBER WATER STOP

NOTES :

1. ALL DIMENSIONS ARE IN CENTIMETERS UNLESS OTHERWISE INDICATED.
2. WEEP HOLES SHALL BE PROVIDED AT THE SPACING SHOWN. SUITABLE UNDER-DRAINS LOCATED BACK OF STEM AND CONNECTED TO AN OUTLET PIPE MAY BE USED IN LIEU OF WEEP HOLES.

Rev.	Date	Description	Checked

Client

Greater Amman Municipality

Project Name

BUS RAPID TRANSIT (BRT) SYSTEM IN AMMAN - PACKAGE 10 A & C NASER BIN JAMEEL STREET

Consultants

steer davies gleave

CONSOLIDATED CONSULTANTS GROUP

Drawing Title

L-SHAPE RETAINING WALL FOR CUT SECTIONS GENERAL DETAILS

Designed By	H. HATTER	Date	OCT 2018
Drawn By	A. HAMDEH	Stage	–
Checked By	H. SALHI	Sheet Size	A1
Approved By	H. SALHI	Scale	N.T.S
Drawing No. :	RW-003	Rev.	00

DIMENSIONS						REINFORCEMENT																																	BEARING PRESSURE
H	B	D	t	C	h1	BAR A1					BAR A2					B1			BAR D1					D2			F1			F2			L1		L2			
cm	cm	cm	cm	cm	cm	SIZE Ø mm	SP cm	a cm	b cm	LENG.	SIZE Ø mm	SP cm	a cm	b cm	LENG.	SIZE Ø mm	SP cm	LENG.	SIZE Ø mm	SP cm	a cm	b cm	LENG.	SIZE Ø mm	SP cm	LENG.	SIZE Ø mm	SP cm	LENG.	SIZE Ø mm	SP cm	LENG.	SIZE Ø mm	SP cm	SIZE Ø mm	SP cm		
800	500	80	80	420	125	25	20	320	200	520	25	20	560	150	710	25	20	715	20	20	185	60	245	20	20	715	25	10	610	25	20	610	20	25	20	25		100
700	450	70	70	380	120	25	30	280	180	460	25	30	490	150	640	25	25	625	20	25	185	55	240	20	25	625	25	15	550	25	30	550	20	25	20	25		80
600	380	60	60	320	100	20	25	240	160	400	20	25	420	150	570	20	25	535	20	25	160	50	210	20	25	535	20	12.5	450	20	25	450	20	25	16	20		70
500	320	50	50	270	70	16	25	200	140	340	16	25	350	120	470	16	25	445	16	25	160	40	200	16	25	445	16	12.5	370	16	25	370	16	20	16	20		65
400	250	45	45	190	50	16	30	160	120	280	16	30	280	100	380	16	30	350	16	30	150	40	190	16	30	350	16	15	300	16	30	300	16	30	16	30		60
300	190	40	40	140	25	16	30	120	100	220	16	30	290	80	370	-	-	-	16	30	140	30	170	16	30	255	16	15	240	16	30	240	16	30	16	30		50
200	120	40	40	80	0	14	25	190	80	270	-	-	-	-	-	-	-	-	14	25	190	30	220	-	-	-	14	25	170	14	30	170	12	30	12	30		40

NOTES :

1. ALL DIMENSIONS ARE IN CENTIMETERS UNLESS OTHERWISE INDICATED.
2. WEEP HOLES SHALL BE PROVIDED AT THE SPACING SHOWN. SUITABLE UNDER-DRAINS LOCATED BACK OF STEM AND CONNECTED TO AN OUTLET PIPE MAY BE USED IN LIEU OF WEEP HOLES.
3. DESIGN DATA:
   a-ANGLE OF INTERNAL FRICTION Ø=30
   b-WIEGHT OF SOIL = 1.8 t/m3
   c- HORIZONTAL ACCELERATION AH =0.15g
   d- LOAD HS20-44 x 150%.
4. EXPOSED SURFACES SHALL BE FAIR FACED, AND BURIED SURFACES SHALL BE PROTECTED BY BITUMINES PAINT 3 COATS.
5. THE REINFORCING SCHEDULES SHOWN ARE ONLY FOR THE CORRESPONDING WALL DIMENSIONS LISTED. LENGTH OF REINFORCING BARS SHOULD BE ADJUSTED TO MATCH THE RETAINING WALL HEIGHT.
6. REINFORCED CONCRETE SHALL BE CLASS 30.
7. BLINDING CONCRETE SHALL BE CLASS 15 .
8. STEEL REINFORCEMENT SHALL CONFORM TO THE REQUIRE. OF ASTM A615 GRADE 60 .

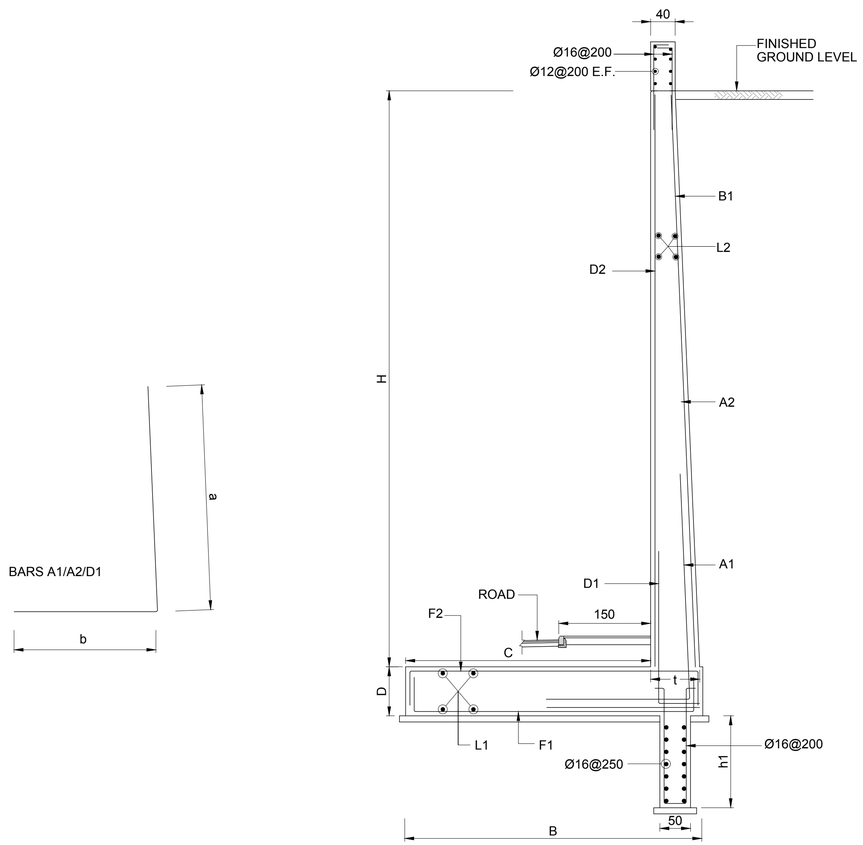

TYPICAL SECTION IN L-SHAPE RETAINING WALL REINFORCEMENT

N.T.S

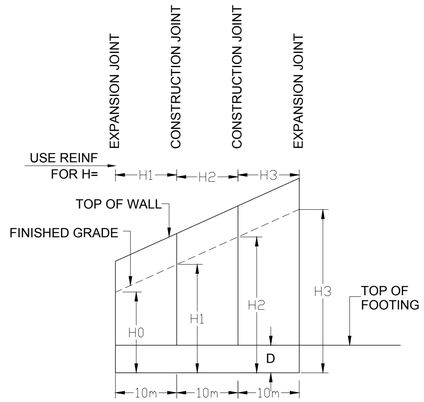

ELEVATION
(CASE OF REGULAR FOUNDATION)

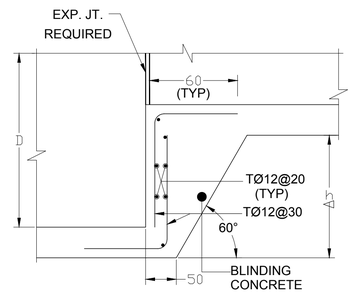

FOR △ h<D

FOOTING STEP ELEVATION
DETAIL A

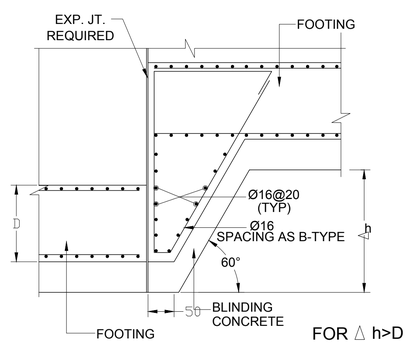

FOR △ h>D

FOOTING STEP ELEVATION
DETAIL B

Rev.	Date	Description	Checked

Client: Greater Amman Municipality

Project Name: BUS RAPID TRANSIT (BRT) SYSTEM IN AMMAN - PACKAGE 10 A & C NASER BIN JAMEEL STREET

Consultants: steer davies gleave; CONSOLIDATED CONSULTANTS GROUP

Drawing Title: L-SHAPE RETAINING WALL FOR CUT SECTIONS REINFORCEMENT DETAILS

Designed By	H. HATTER	Date	OCT 2018
Drawn By	A. HAMDEH	Stage	–
Checked By	H. SALHI	Sheet Size	A1
Approved By	H. SALHI	Scale	N.T.S
Drawing No. :	RW-004	Rev.	00